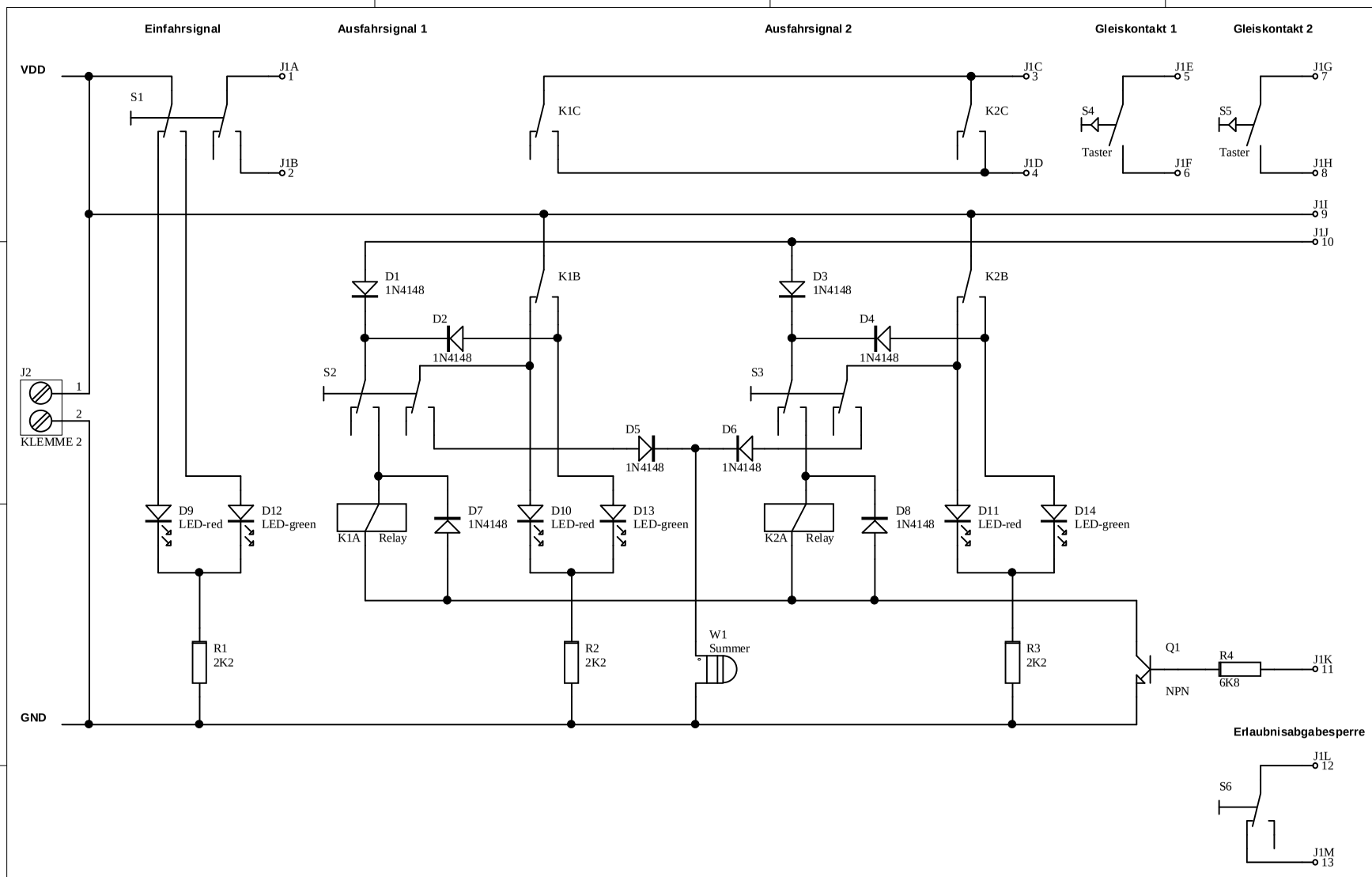

Title **Bahnhofssimulator für Blockkästen**		
Size A4	Number	Revision **1a**
Date: 7-Jan-2003		Sheet **1** of **1**
File: C:\Eigene Dateien\..\Bf_sim.sch		Drawn By: **Reinhard Müller**